PARTS DIAGRAM

RIPTIDE TRANSOM 55 V/T

55 LBS THRUST - 12 VOLT - 36"/42" SHAFT

This page provides Minn Kota® WEEE compliance disassembly instructions. For more information about where you should dispose of your waste equipment for recycling and recovery and/or your European Union member state requirements, please contact your dealer or distributor from which your product was purchased.

Tools required, but not limited to: flat head screw driver, Phillips screw driver, socket set, pliers, wire cutters.

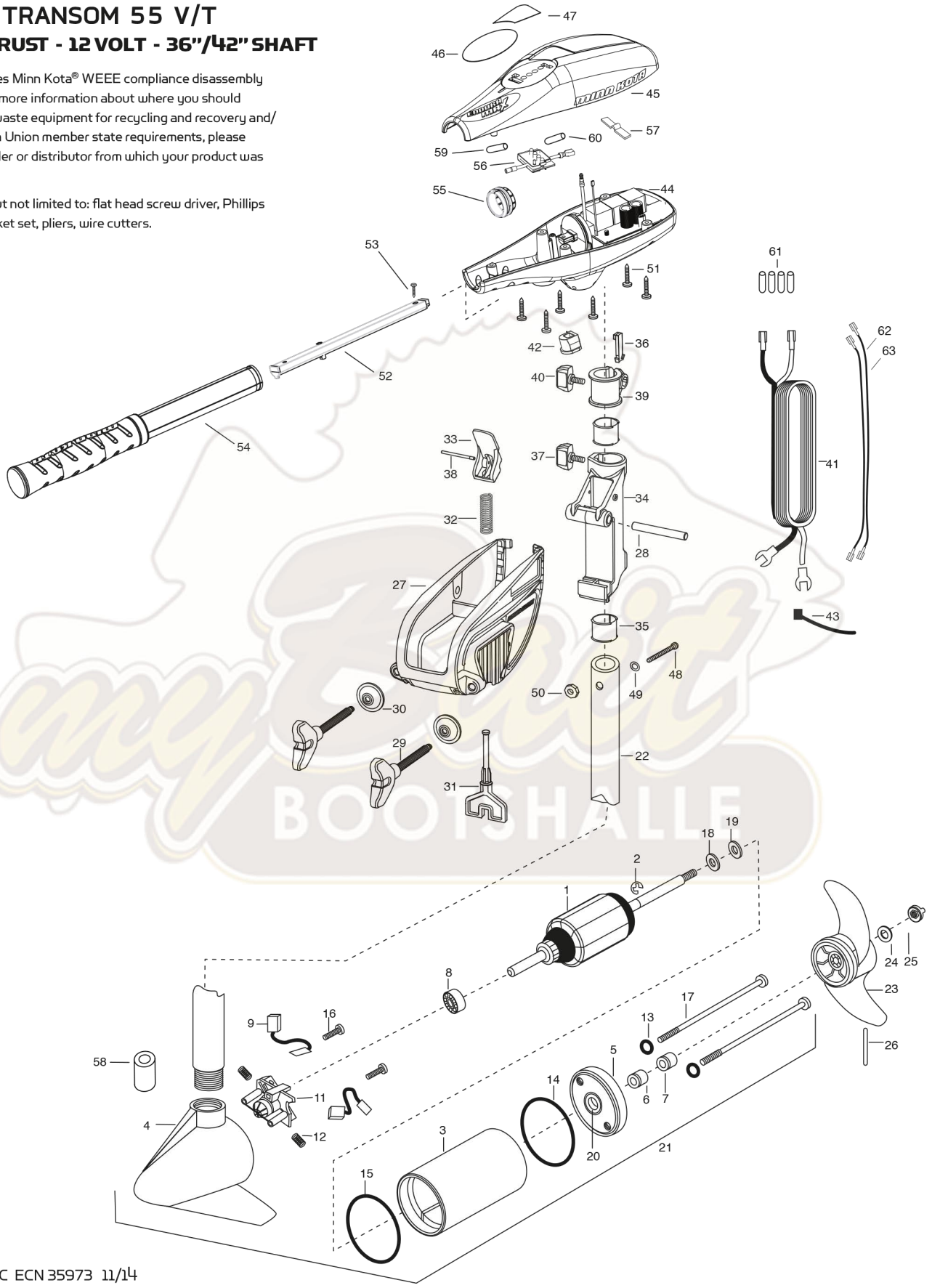

2094925 rev C ECN 35973 11/14

©2014 Johnson Outdoors Marine Electronics, Inc.

PARTS LIST

RIPTIDE TRANSOM 55 V/T

55 LBS THRUST - 12 VOLT - 36"/42" SHAFT

ITEM	QTY	PART NUMBER	DESCRIPTION
1	1	2-100-117	ARMATURE ASSEMBLY 12V 3.62
2	1	788-015	RETAINING RING
3	1	2-200-301	HOUSING ASSEMBLY CENTER 3.62 SW
4	1	421-336	BRUSH END HOUSING ASSEMBLY 3.62
5	1	2-400-337	PLAIN END HOUSING ASSEMBLY 3.62
6	1	880-003	SEAL
7	1	880-006	SEAL W/SHIELD
8	1	140-010	BALL BEARING
9	2	188-036	BRUSH ASSEMBLY
11	1	738-036	BRUSH PLATE W/HOLDER 3.62
12	2	975-040	TORSION SPRING
■	1	2888460	SEAL AND O-RING KIT
13	2	701-008	O-RING — THRU BOLT
14	1	701-081	O-RING
15	1	337-036	GASKET
16	2	830-007	SCREW — SELF THREAD #8-32
17	2	830-042	THRU BOLT #10-32 X 8.83
18	1	990-067	WASHER — STEEL THRUST
19	1	990-070	WASHER — NYLATRON
20	1	144-049	FLANGE BEARING (SERVICE ONLY)
21	1	2097078	MOTOR ASSEMBLY 12 V 3.62 SW 36"
	1	2097093	MOTOR ASSEMBLY 12 V 3.62 SW 42"
22	1	2002021	36" COMPOSITE TUBE
	1	2002022	42" COMPOSITE TUBE
■	1	1378170	PROPELLER KIT
23	1	2091170	PROPELLER 3.62 HUB DIA
24	1	2151726	WASHER — 5/16 STD SS
25	1	2198400	ZINC ANODE
26	1	2092600	DRIVE PIN
■	1	2771816	BRACKET & HINGE ASSEMBLY (INCLUDES 27-38)
■	1	2771913	BRACKET ASSEMBLY (INCLUDES 27, 29, 30)
*27	1	2061910	BRACKET
28	1	2060511	HINGE PIN
*29	2	2061301	SCREW — CLAMP

ITEM	QTY	PART NUMBER	DESCRIPTION
*30	2	2331700	WASHER — CLAMP SCREW
31	1	2063605	PLASTIC T-BAR
32	1	2062706	T-BAR SPRING
33	1	2067201	TILT BLACK LEVER
34	1	2061810	PLASTIC HINGE
35	2	2037301	HINGE BUSHING
36	1	2062800	SNAP-IN TENSION BLOCK
37	1	2011386	SCREW — TENSION/KNOB
38	1	2060516	TILT LEVER PIN
39	1	2061520	DEPTH COLLAR
40	1	2011366	SCREW — COLLAR/NEW KNOB
41	1	2050609	LEADWIRE
42	1	2062905	STRAIN RELIEF
43	1	2376312	TIE WRAP
44	1	2994041	CONTROL BOX WHITE
45	1	2060226	CONTROL BOX COVER WHITE
46	1	2095635	DECAL COVER RIPTIDE 55 VS/T
47	1	2095636	COVER DECAL, RT/VS/T
48	1	2033403	SCREW-10-24 X 1-3/4, SS
49	1	2061720	WASHER-NYLON, 3/8 OD, 3/16 ID
50	1	2333101	NUT-10-24 HEX, SS
51	6	2372100	SCREW-8-18 X 5/8, SS
52	1	2990924	INNER HANDLE ASSEMBLY
53	1	2012104	SCREW-#6 X 1/2" SS
54	1	2990952	OUTER HANDLE ASSEMBLY
55	1	2060009	FRONT BEARING
56	1	2074080	BATTERY METER 12V
57	1	2302742	SPRING DETENT, OFF
58	1	2307312	FERRITE BEAD
59	1	2305415	SHRINK TUBE - .472 ID X 2.25"
60	1	2305410	SHRINK TUBE - .315 OD X 2.25"
61	4	2305403	SHRINK TUBE - .500 ID 1.0" ADHSV
62	1	640-002	BLACK LEADWIRE
63	1	640-113	RED LEADWIRE

■ THIS ITEM IS PART OF AN ASSEMBLY.
*THIS ITEM IS PART OF A KIT AND ONLY LISTED FOR VIEWING PURPOSES.

©2014 Johnson Outdoors Marine Electronics, Inc.