PARTS DIAGRAM

RIPTIDE TRANSOM 55 SC/T

55 LBS THRUST - 12 VOLT - 42" SHAFT

This page provides Minn Kota® WEEE compliance disassembly instructions. For more information about where you should dispose of your waste equipment for recycling and recovery and/or your European Union member state requirements, please contact your dealer or distributor from which your product was purchased.

Tools required, but not limited to: flat head screw driver, Phillips screw driver, socket set, pliers, wire cutters.

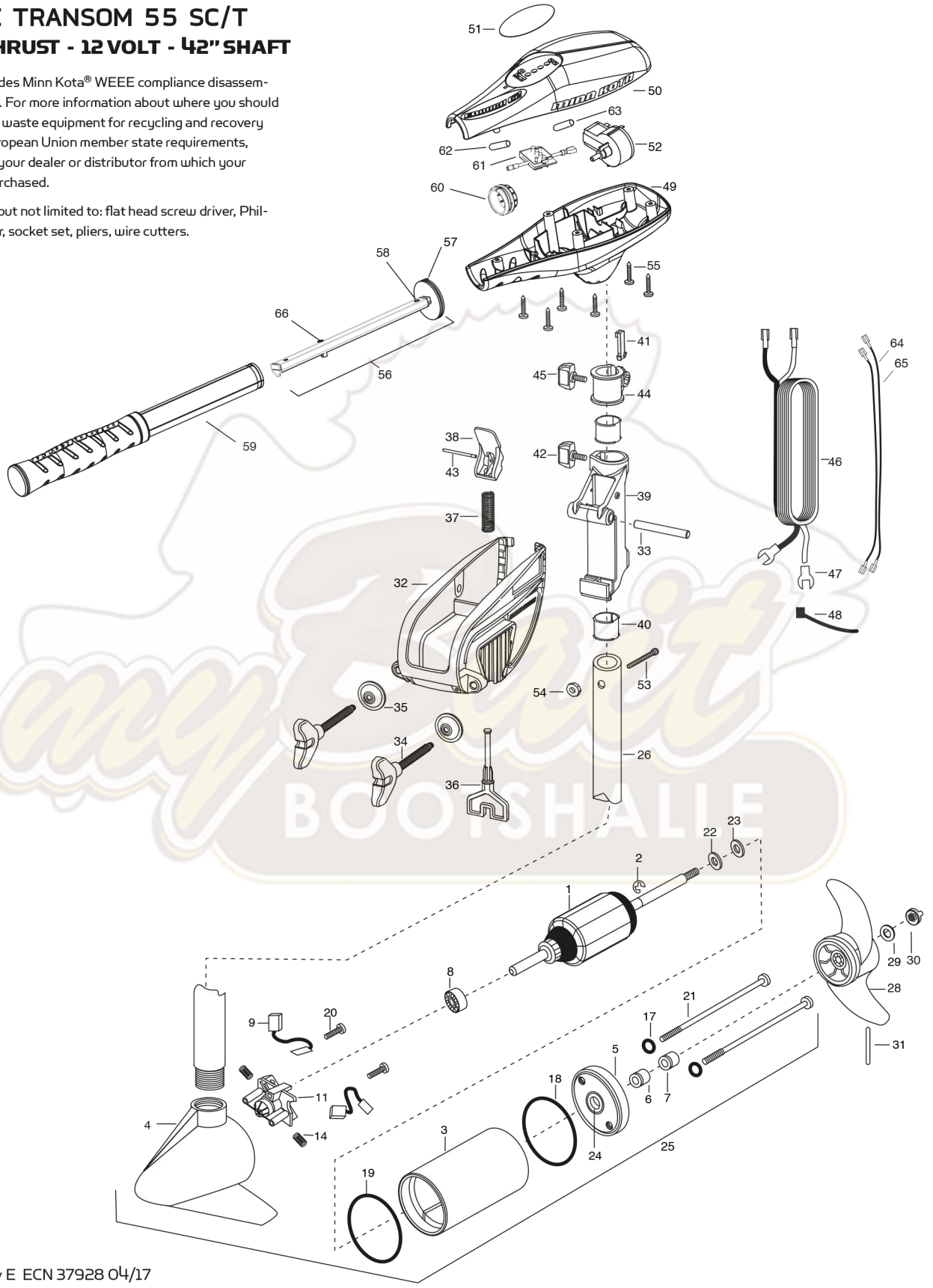

2094922 rev E ECN 37928 04/17

©2014 Johnson Outdoors Marine Electronics, Inc.

PARTS LIST

RIPTIDE TRANSOM 55 SC/T

55 LBS THRUST - 12 VOLT - 42" SHAFT

ITEM	QTY	PART NUMBER	DESCRIPTION
1	1	2-100-117	ARMATURE ASSEMBLY 12V 3.62
2	1	788-015	RETAINING RING
3	1	2-200-301	HOUSING ASSEMBLY CENTER 3.62 SW
4	1	2-300-337	BRUSH END HOUSING ASSEMBLY 3.62 SP.CO
5	1	2-400-337	PLAIN END HOUSING ASSEMBLY 3.62
6	1	880-003	SEAL
7	1	880-006	SEAL W/SHIELD
8	1	140-010	BALL BEARING
9	2	188-036	BRUSH ASSEMBLY
11	1	738-036	BRUSH PLATE W/HOLDER 3.62
14	2	975-040	TORSION SPRING
■	1	2883460	SEAL AND O-RING KIT
17	2	701-008	O-RING — THRU BOLT
18	1	701-081	O-RING
19	1	337-036	GASKET
20	2	830-007	SCREW — SELF THREAD #8-32
21	2	830-042	THRU BOLT #10-32 X 8.83
22	1	990-067	WASHER — STEEL THRUST
23	1	990-070	WASHER — NYLATRON
24	1	144-049	FLANGE BEARING (SERVICE ONLY)
25	1	2097079	MOTOR ASSEMBLY 12 V 3.62 5SP SW
26	1	2002022	42" COMPOSITE TUBE
■	1	1378170	PROPELLER KIT
*28	1	2091170	PROPELLER 3.62 HUB DIA
*29	1	2151726	WASHER — 5/16 STD SS
*30	1	2198400	ZINC ANODE
*31	1	2092600	DRIVE PIN
■	1	2771816	BRACKET & HINGE ASSEMBLY (INCLUDES 32-43)
■	1	2771913	BRACKET ASSEMBLY (INCLUDES 32, 34, 35)
*32	1	2061910	BRACKET
33	1	2060511	HINGE PIN
*34	2	2061301	SCREW — CLAMP

ITEM	QTY	PART NUMBER	DESCRIPTION
*35	2	2331700	WASHER — CLAMP SCREW
36	1	2063605	PLASTIC T-BAR
37	1	2062706	T-BAR SPRING
38	1	2067201	TILT BLACK LEVER
39	1	2061810	PLASTIC HINGE
40	2	2037301	HINGE BUSHING
41	1	2062800	SNAP-IN TENSION BLOCK
42	1	2011386	TENSION KNOB SCREW
43	1	2060516	TILT LEVER PIN
44	1	2061520	DEPTH COLLAR
45	1	2011366	COLLAR SCREW
46	1	20206321	LEADWIRE (10 GA) FLAG/PIGGYBACK
47	2	2020703	SPADE TERMINAL 14GA HD
48	1	2376312	TIE WRAP
49	1	2062517	CONTROL BOX WHITE
50	1	2060218	CONTROL BOX COVER WHITE
51	1	2095632	DECAL COVER RIPTIDE 55
52	1	2064028	SWITCH — FWD/REV 5 SP
53	1	2033403	SCREW — #10-24 X 1-3/4
54	1	2333101	NUT — #10-24 HEX
55	6	2372100	SCREW — #8-18 X 5/8
56	1	2990919	INNER HANDLE ASSEMBLY
57	1	2060405	HANDLE PIVOT
58	1	2012104	SCREW — #6 X 1/2" SS
59	1	2990928	OUTER HANDLE ASSEMBLY
60	1	2060009	FRONT BEARING
61	1	2074080	BATTERY METER 12V
62	1	2305415	SHRINK TUBE
63	1	2305410	SHRINK TUBE
64	1	640-006	LEADWIRE, BLACK
65	1	640-115	LEADWIRE, RED
66	1	2882726	BALL DETENT RTNR SPRING ASM KIT

■ This item is part of an assembly.
* This item is part of a kit and only listed for viewing purposes.

©2014 Johnson Outdoors Marine Electronics, Inc.